NORTH BAYOU

www.new-nb.com

P65 Ergonomics Interactive Cantilever
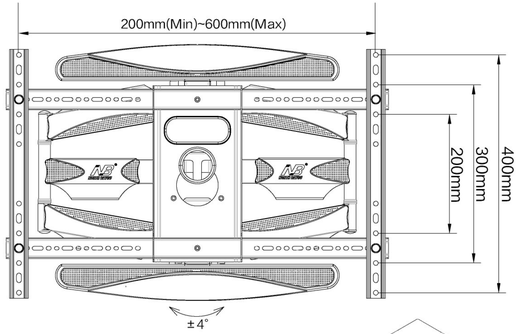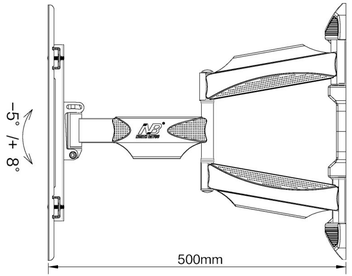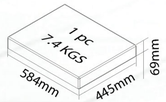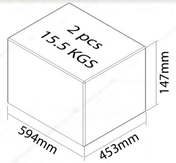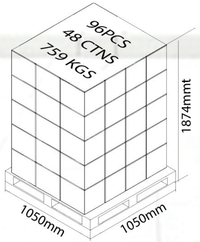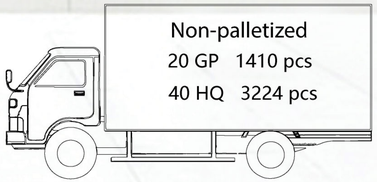
Screen Size	Capacity	VESA	Upright	Rotation	Tilt	Swivel
55"-85"	150 lbs (68.2kg)	200×200-600×400mm	/	+4 ° /−4°	+8 °/ -5 °	180°